First operation tool layout. Main Program: O0027, Sub Program: O127.

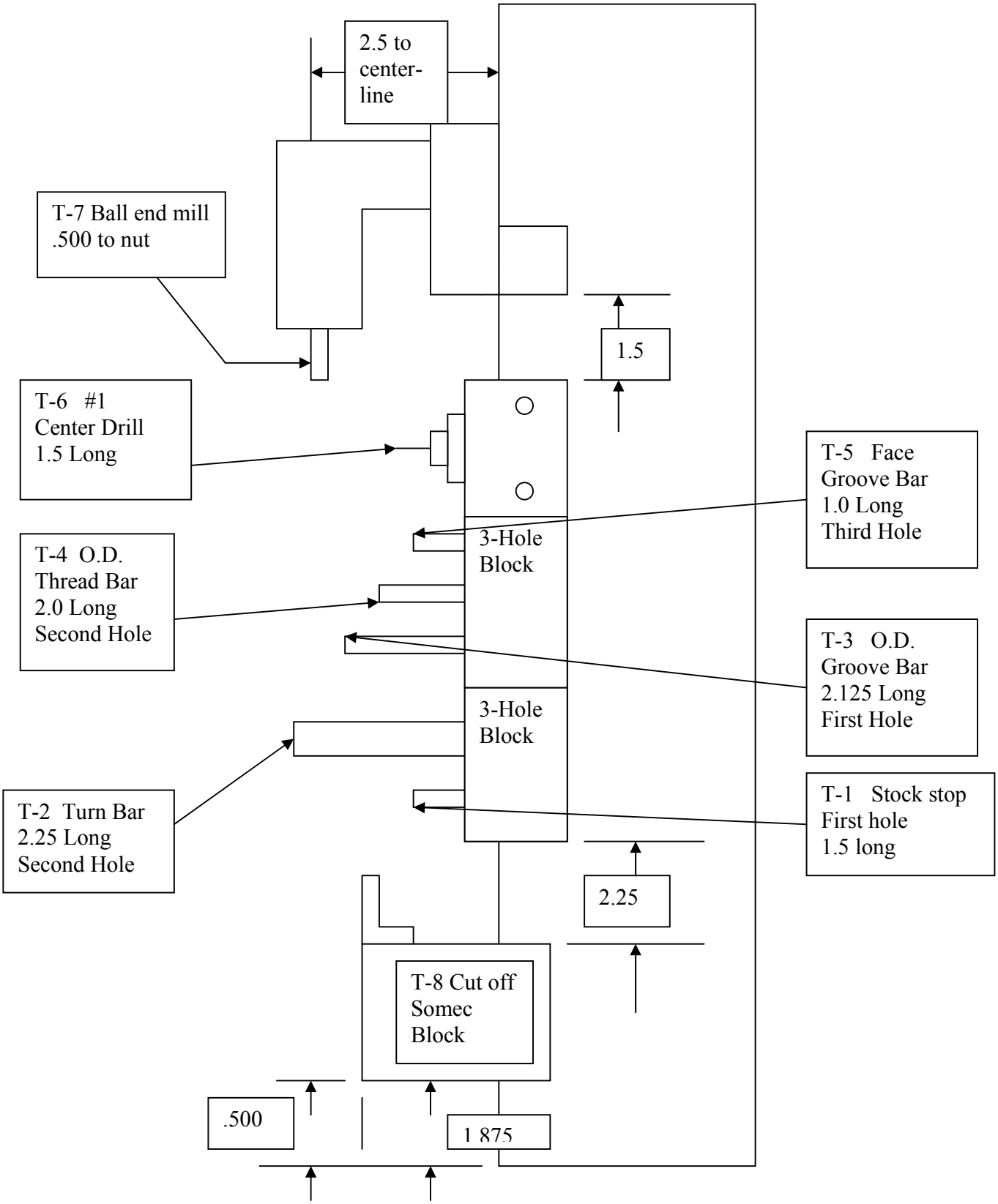
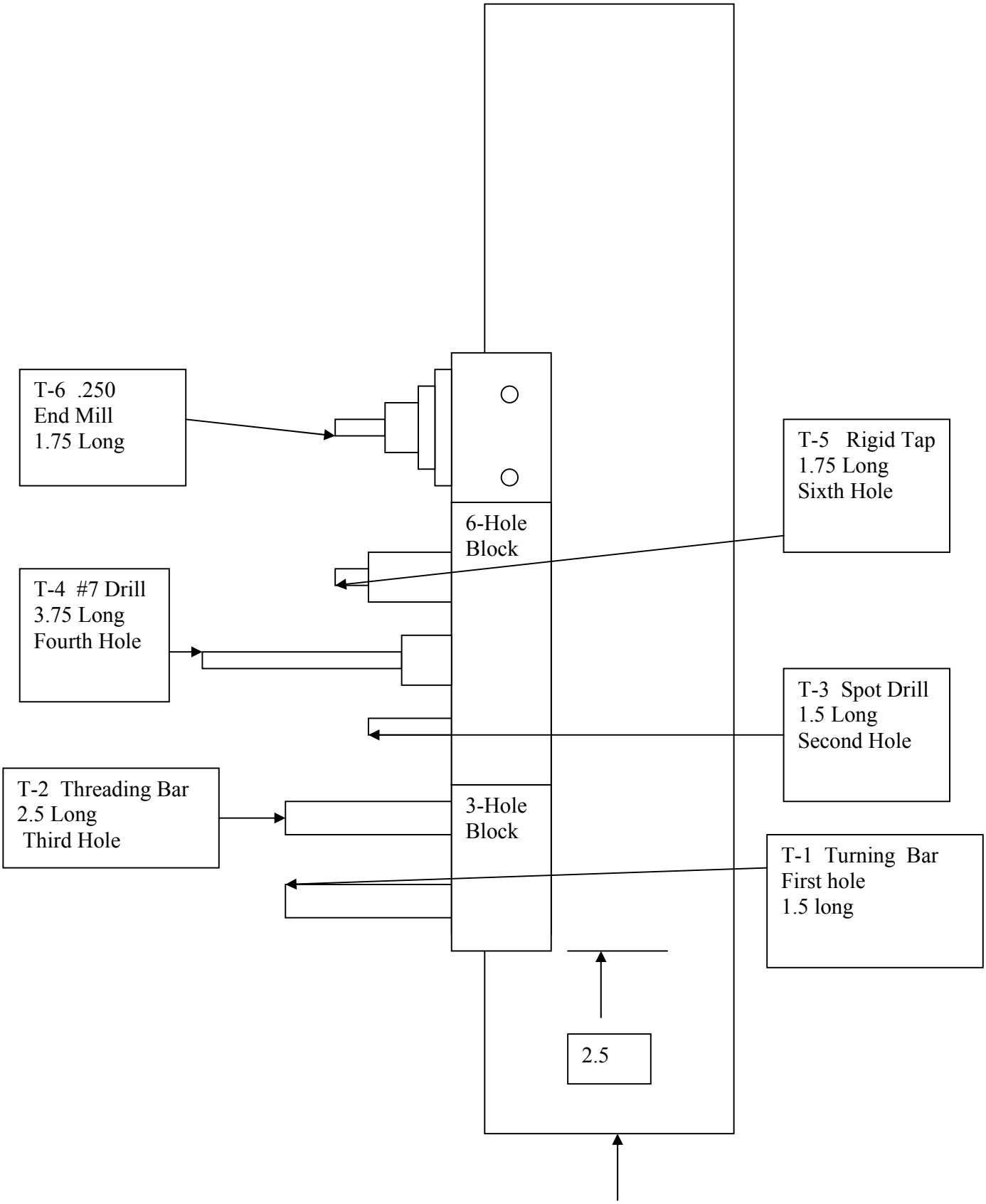
GT-27 Second operation tool layout: Program: O0327.